www.buyersproducts.com
Phone (440) 974-8888
Fax 800-841-8003

Installation Instructions

Remote Control Spot Light

1492200 - White housing, Permanent mount, with remote
1492201 - White housing, Permanent & Magnetic mount, 12v power plug, with remote
1492202 - Black housing, Permanent mount, with remote
1492203 - Black housing, Permanent & Magnetic mount, 12v power plug, with remote



Features:

- Continuous Horizontal Rotation: 360°
- Vertical Tilt: 110°
- Voltage: 12-24 VDC
- Amps: 4.75A (@ 12VDC)
- Lumens: 6720
- Permanent Mount Only
- 5-Year Warranty

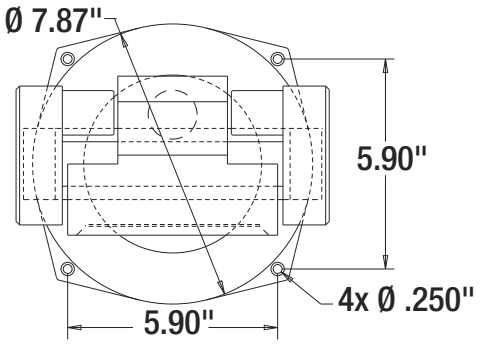

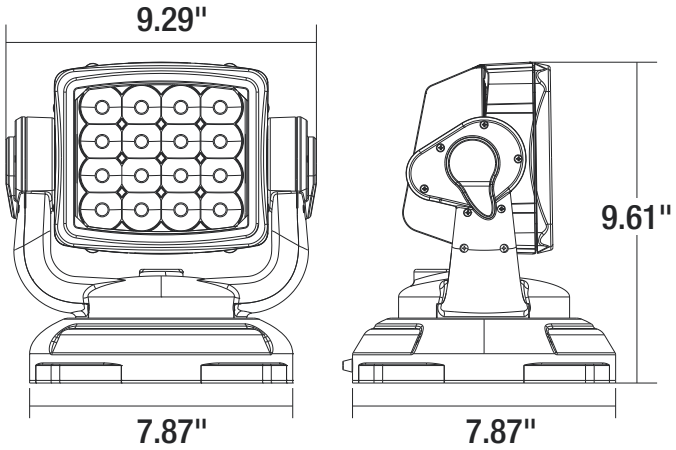

Remote Control Coding

The remote controller can be coded to avoid interference from other "like" remote controls.

How to code:

Press the power button to turn on the light. Once the light turns on, press and hold the power button for approximately 6 seconds. Release the power button once the light starts to flash 3 times (long flash). The light will turn off automatically. Coding is now complete.

How to lift code:

Press the power button to turn on the light. Once the light turns on, press and hold the power button for approximately 6 seconds. Release the power button once the light starts to flash 3 times (short flash). The light will turn off automatically. The coding has now been lifted.

Remote Control Functions

- Remote-Controlled Distance: 100ft
- Battery Type: 23A (battery not included)
- Remote Control Replacement P/N: 3059911

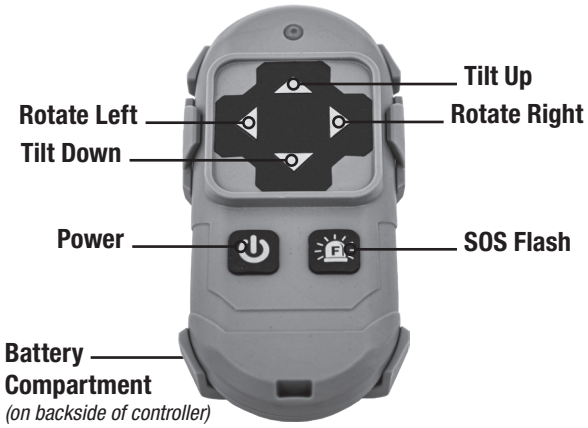

WARRANTY

Buyers Products Company warranties all LED Strobe and LED Work Light products to the original owner against defects in workmanship and material for a period of five (5) years from the date of purchase unless otherwise specified. Buyers Products must review each warranty claim and reserves the right to offer a refund for the original sale price of the product or replace the defective light. The five (5) year warranty is non transferable, applies to the original owner, and is subject to the following terms and conditions. The warranty will be void in cases of misuse, severe abuse, and failure to properly install the LED Light. Breakage of the lens or housing, corrosion at the plug, wire wicking, voltage spikes, and product failure caused by road chemicals and acid type washes are not warrantable claims. This warranty gives you specific legal rights and you may also have other legal rights that vary from state to state.