www.buyersproducts.com
Phone (440) 974-8888
Fax 800-841-8003

Installation Instructions

LT30 **Gas Can Rack**

for Utility Landscape Trailers

Holds one 5 gal. gas can or two 2-1/2 gal. gas cans.

Before you begin installing:
1. Read and understand these instructions completely.
2. Verify that you have received all the parts listed in the bill of materials.

⚠WARNING

Always wear safety glasses when using power tools.

Utility Trailer Installation Instructions

Tools Required:
- 9/16" Wrenches and/or Sockets
- (1) Electric Drill
- 7/32" Hexagon Allen Wrench
- (1) 13/32" Drill Bit

1. Place the gas can rack on the rail of your utility trailer where you would like it mounted. **Make sure the rack does not extend past the widest part of the trailer.** Align the holes in the bottom of the gas can rack with the center of the rail. You may need to adjust the position of the rack so the four slots in the bottom are clear of any obstruction.

2. Mark the position of the two holes on the trailer rail.

⚠WARNING

Check for locations of brake lines and electrical wiring etc., before drilling any holes. Any damage to trailer during installation is the installer's sole responsibility.

3. Drill 13/32" holes in the positions marked.

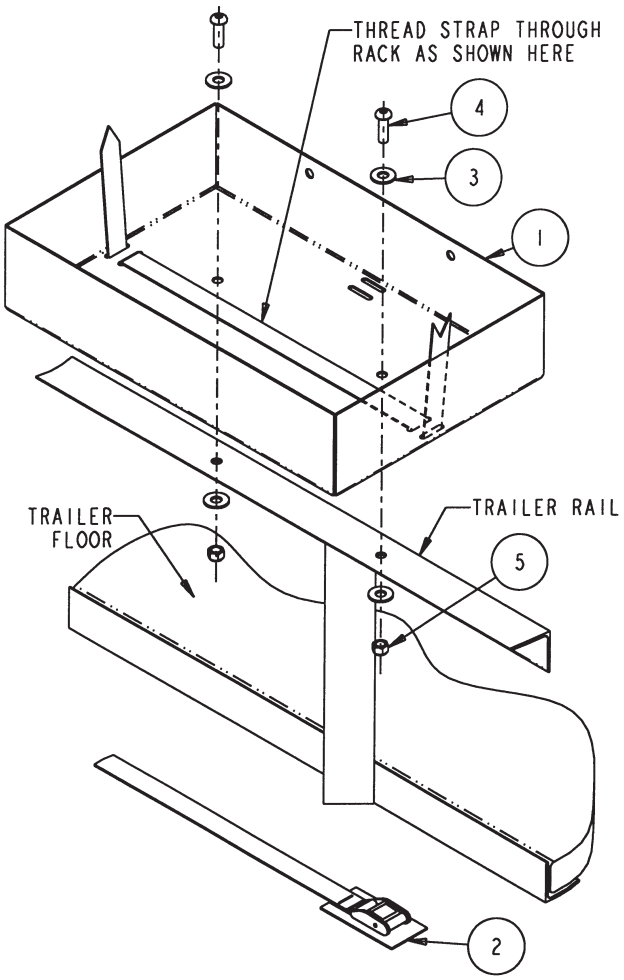

Bill of Materials

ITEM	PART NO.	QTY.	DESCRIPTION
1	3004328	1	Rack, Gas Can, Rack Only
2	3004710	1	Strap, 60" Lashing w/Cam Buckle
3	-	4	Washer, Flat 3/8 USS Zn
4	-	2	Screw, Button Socket Head Cap, 3/8-16 x 1-1/4
5	-	2	Nut, Nylock 3/8-16 x 7/16 Zn

4. Bolt the rack to the trailer with two 3/8-16 x 1-1/4 socket head cap screws, four 3/8" flat washers, and two 3/8-16 nylock nuts supplied and tighten.

5. Thread the free end of the strap through the rack as shown for holding two 2-1/2 gal. cans or thread the strap into the other slots for holding one 5 gal. can. Then thread the buckle onto the end of the strap as shown.

—continued

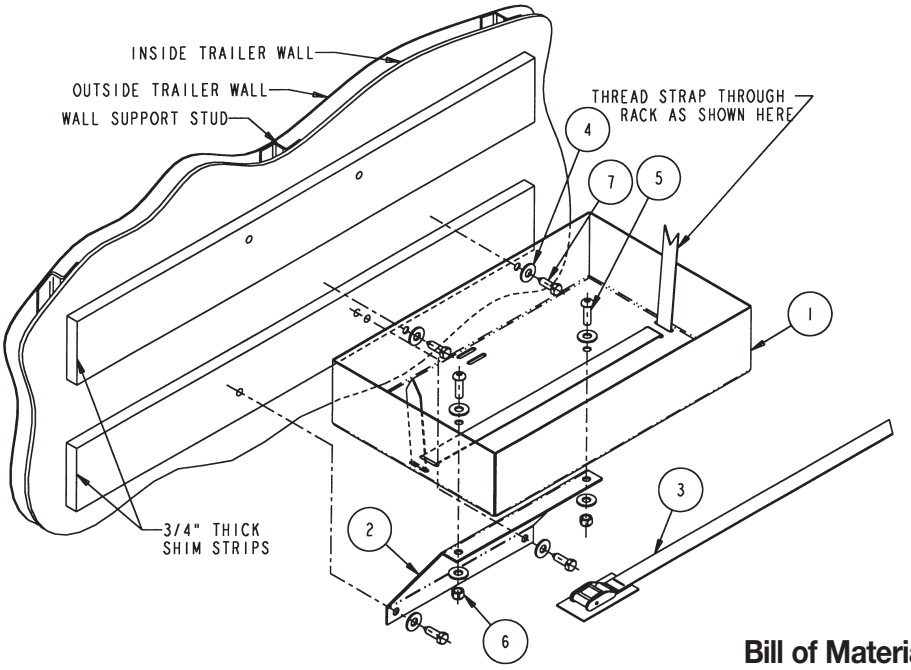

Enclosed Trailer Installation Instructions

Tools Required:

- 9/16" Wrench and/or Socket
- Electric Drill
- 7/32" Hexagon Allen Wrench
- 1/4" Drill Bit
- 3/4" Plywood Shim Strips
- Shim Screws

1. Assemble the gusset bracket to the gas can rack with two 3/8-16 x 1-1/4 socket head cap screws, four 3/8" flat washers and two 3/8-16 nylock nuts supplied.

2. In order to mount this rack to an enclosed trailer, **you must first add 3/4" plywood shim strips to the walls.** These shim strips must be attached to at least two wall support studs with suitable fasteners. If you don't know what kind or length of fastener to use contact your trailer dealer or manufacturer for their recommendation.

3. Place the place the gas can rack with gusset against the shims, hold level, and mark the position of the two 3/8" holes in rack and the two 3/8" gusset holes.

WARNING! Check for locations of brake lines and electrical wiring etc., before drilling any holes. Any damage to trailer during installation is the installer's sole responsibility.

4. Drill four 1/4" pilot holes in the positions just marked for the 3/8" lag screws. Be extremely careful not to drill through the outside trailer wall.

5. Fasten the rack to the trailer wall with the four 3/8" x 1-1/4" lag screws and four 3/8" flat washers supplied.

6. Thread the free end of the strap through the rack as shown for holding two 2-1/2 gal. cans or thread the strap into the other slots for holding one 5 gal. can. Then thread the buckle onto the end of the strap as shown.

Bill of Materials

ITEM	PART NO.	QTY.	DESCRIPTION
1	3004328	1	Rack, Gas Can, Rack Only
2	3004501	1	Bracket, Gusset, LT15 & LT30
3	3004710	1	Strap, 60" Lashing w/Cam Buckle
4	-	8	Washer, Flat 3/8 USS Zn
5	-	2	Screw, Button Socket Head Cap, 3/8-16 x 1-1/4
6	-	2	Nut, Nylock 3/8-16 x 7/16 Zn
7	-	4	Screw, Hex Head Lag, 3/8 x 1-1/4, Zn

Warranty

Buyers Products Co. warrants all truck/trailer hardware manufactured or distributed by it, to be free from defects in material and workmanship for a period of one year from date of shipment. Parts must be properly installed and used under normal conditions. Any product which has been altered, including modification, misuse, accident or lack of maintenance will not be considered under warranty. Normal wear is excluded. The sole responsibility of Buyers Products Co. under this warranty is limited to repairing or replacing any part or parts which are returned, prepaid, and are found to be defective by Buyers Products Co. Authorization from Buyers Products Co. must be obtained before returning any part. No charges for transportation or labor performed on Buyers' products will be allowed under this warranty.