SaltDogg by Buyers
9049 Tyler Blvd. • Mentor, Ohio 44060
Phone (440) 974-8888 • Fax (800) 841-8003
www.saltdogg.com

Installation Instructions

9331000 MDS Folding Ladder

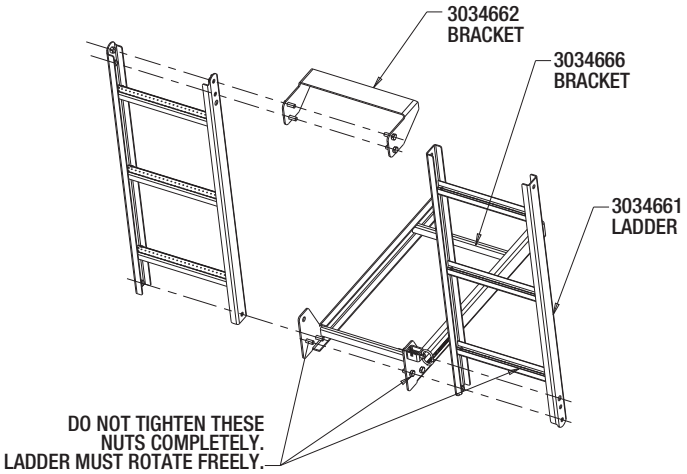

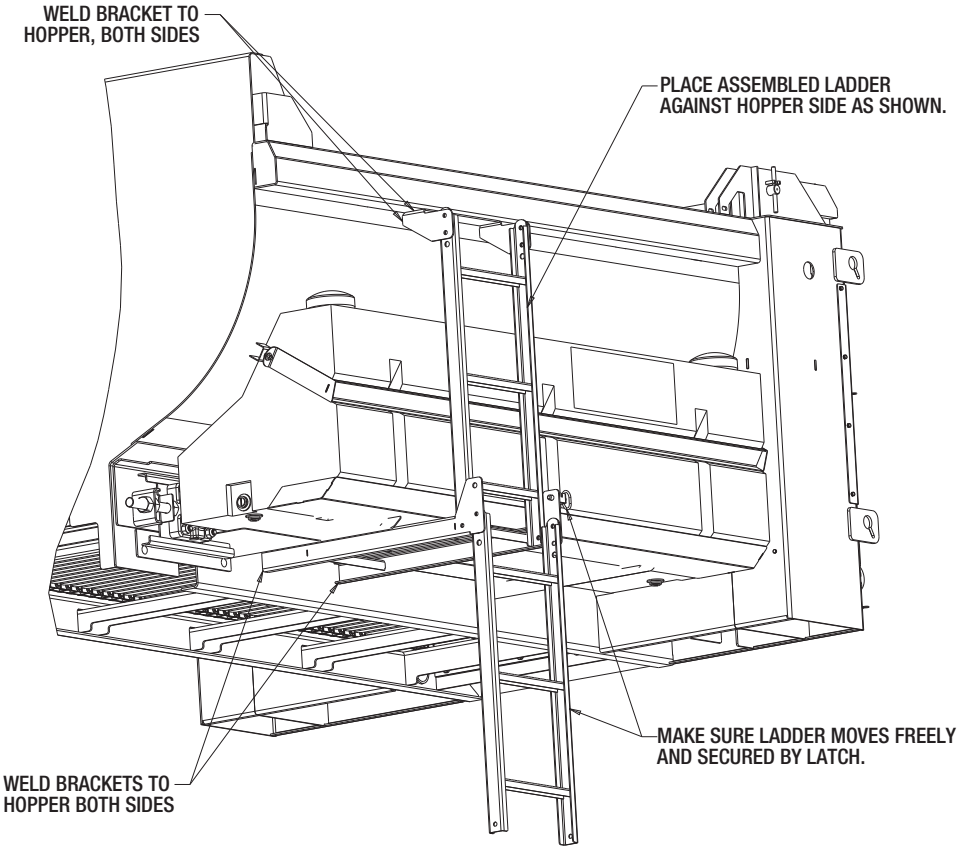

WARRANTY

Buyers Products Co. warrants all truck/trailer hardware manufactured or distributed by it, to be free from defects in material and workmanship for a period of one year from date of shipment. Parts must be properly installed and used under normal conditions. Any product which has been altered, including modification, misuse, accident or lack of maintenance will not be considered under warranty. Normal wear is excluded. The sole responsibility of Buyers Products Co. under this warranty is limited to repairing or replacing any part or parts which are returned, prepaid, and are found to be defective by Buyers Products Co. Authorization from Buyers Products Co. must be obtained before returning any part. No charges for transportation or labor performed on Buyers' products will be allowed under this warranty.