SaltDogg by Buyers
9049 Tyler Blvd. • Mentor, Ohio 44060
Phone (440) 974-8888 • Fax (440) 974-0165
Toll-Free Fax 800-841-8003 • saltdogg.com

Installation Instructions

PRO2500 &PRO2500CH Series SaltDogg® Electric Drive Poly Hopper Spreader

2.5 cubic yards

U.S. Patent 9,562,333

Table of Contents

General Information 1
Safety Precautions 1
Installation Instructions 1-3
Spreader Operation 4
Spreader Maintenance 4-5
Warranty Information 5
Repair Parts & Drawings 5-8

General Information

Overall Length: 116.5 inches
Overall Width: 48 inches
Overall Height: 44.3 inches
Empty Weight: 986 lbs.
Capacity Struck: 2.5 cu. yd.

Vehicle Requirements

Trucks with minimum GVWR 13,000 lbs. (8 ft. bed), 150 AMP or higher alternator is recommended.

Average Material Weights

This spreader is restricted to the use of dry, free-flowing salt, sand, and sand/salt mix. **Do not** run other materials through the spreader.

Materials to use	Weight (pounds per cubic yard)
Fine Salt-Dry	2,250
Coarse Salt-Dry	1,431
Sand/Salt up to 50/50 Mix-Dry	2,700

Note: *To calculate the total spreader weight (including ice control material), add the empty spreader weight plus the ice control material and spreader accessories.*

⚠ CAUTION

Do not overload vehicle beyond the vehicle's GVWR or GAWR. Check vehicle's load rating certification sticker for maximum vehicle capacity.

⚠ WARNING

Improper installation and operation could cause personal injury, and/or property damage. Observe the following Safety Precautions before, during and after operating this spreader. By following these precautions and common sense, possible injury to persons and potential damage to this machine may be avoided.

Safety Precautions

1. Read the entire Installation Instructions before operating this spreader.
2. Read and understand all safety decals on the spreader before operating.
3. Check to make sure all safety guards are securely mounted into place before operating this spreader.
4. Verify that all personnel are clear of the spreader spray area before starting or operating this spreader.
5. Do not over-load your vehicle beyond payload limits. If there are any questions, contact the vehicle manufacturer.
6. Do not adjust, clean, lubricate or unclog material jambs without first turning off the spreader.
7. Do not climb on or in the spreader during operation. Do not ride on the spreader while the vehicle is in motion.
8. Make sure the spreader is securely fastened to the vehicle in accordance with this manual.
9. Do not operate a spreader that is in need of maintenance or repairs.
10. Do not operate the spreader while ill, tired, or under the influence of alcohol or drugs.
11. Batteries normally produce explosive gases which can cause personal injury. Always disconnect the battery before removing or replacing electrical components.
12. Do not leave unused material in hopper. Material can freeze or solidify, causing spreader to not work properly, and/or damage the unit. Empty and clean after each use.

Installation Instructions

1. Mounting the Spreader onto the Vehicle

A. Remove the tailgate from the vehicle (if equipped) as well as any other object which will interfere with the spreader.
B. Check truck's bed for all kinds of sharp debris or foreign objects. They can cut and seriously damage poly hopper.
C. Remove chute, hardware kit from inside spreader. If spreader has been used make sure there is no material left in the hopper.
D. Lift spreader using all tie downs (Fig. 1), or using fork lift. Lower spreader into the truck bed.

—continued inside

Fig. 1

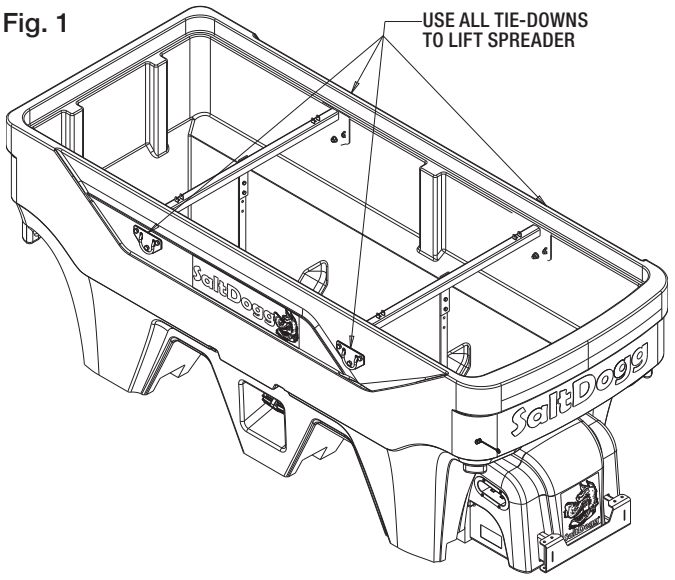

E. Center the spreader on the truck with the chute mount about 14" to the rear edge of the bed.

F. Chute assembly. Assembly chute to hopper following instructions shown in Fig. 2 – Fig. 3

Fig. 2

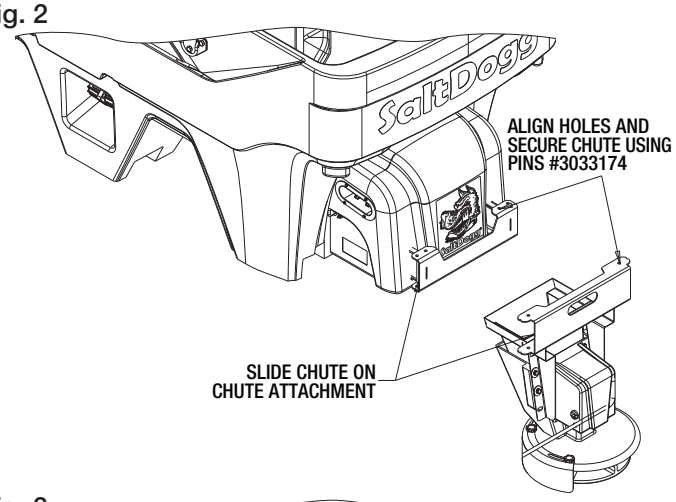

Fig. 3

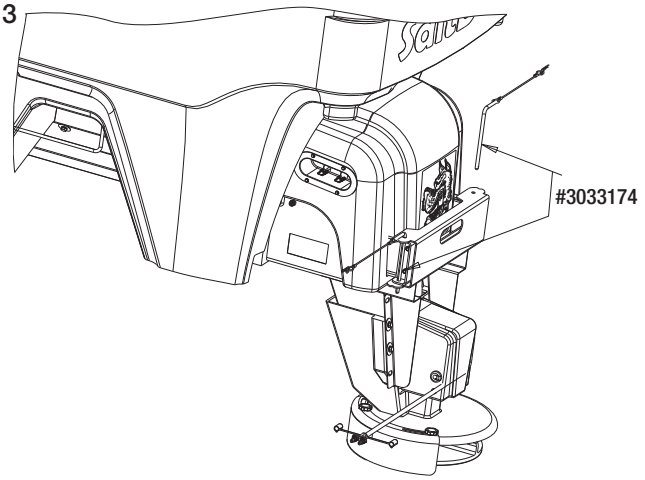

G. Slide spreader forward or backwards to make sure that chute doesn't interfere with any part of the truck. Remove one pin and rotate chute as shown in Fig. 4. Make sure that chute doesn't hit any part of the truck.

Fig. 4

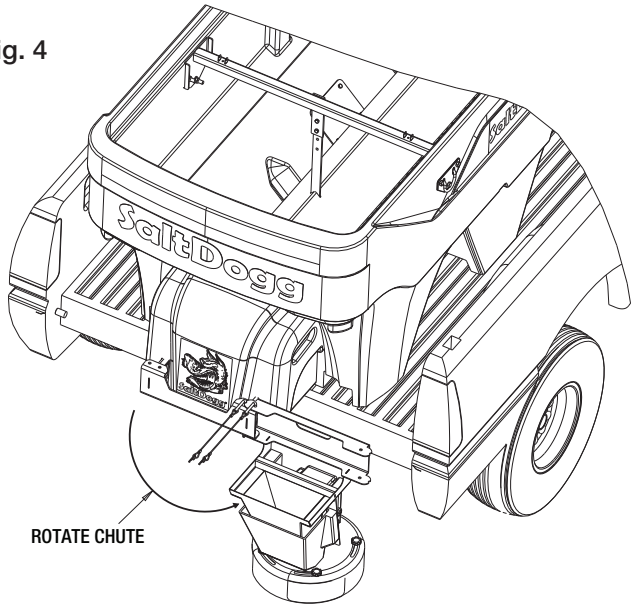

H. Measure the distance from the front of the truck bed to the front of the hoppers front legs. Fabricate spacer to fit between front of the spreader and front of the bed using 2 x 6 boards and install it between the spreader and truck bed front wall as shown in Fig. 5

Fig. 5

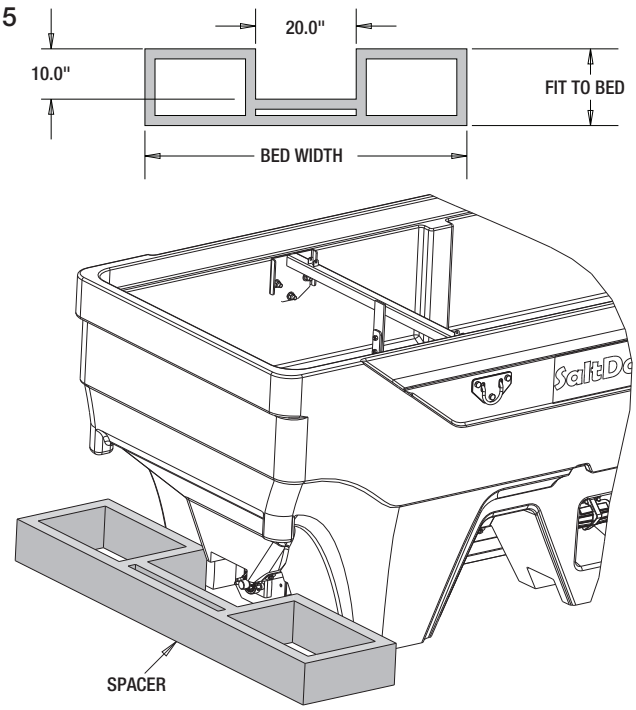

I. In addition, secure spreader using four ratchet straps. Tighten straps evenly. (Fig 5.1)

Fig. 5.1

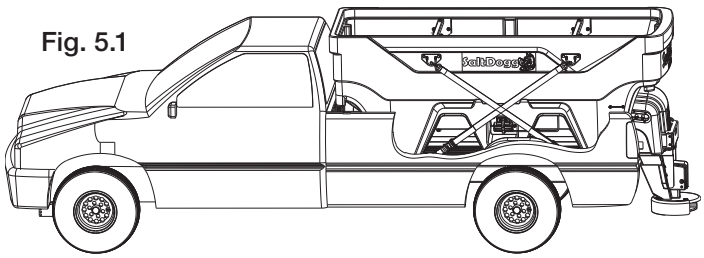

⚠ CAUTION

Inspect straps and hardware after each time spreader is loaded. Tighten straps and hardware if necessary.

⚠ WARNING

Important! Do not use ratchet straps or tailgate latch exclusively! Always use spacer!

2. Control Box and Vehicle Wiring Harness Installation

Note: *Make sure you have connected the proper wire color. This is a wire ground electrical system! No Connections to truck's frame or body allowed!*

⚠ WARNING

Do not drill holes into fuel tanks, fuel lines, through electrical wiring, etc that may be damaged by drilling. To insure good performance of your spreader, check the condition of truck's electrical system. Using digital voltmeter, check alternator and battery voltage. With engine running and head lights and heater fan ON good voltage reading should fall between 13.0 and 15.3 volts. If voltage reading falls out of this range, check and adjust your electric system.

Note: *Always disconnect battery before attempting to install electrical components on your vehicle*

A. Mount the controller in a convenient location in the truck cab. It is recommended not to mount the controller directly in front of heat vents. Allow ample air space around controller

⚠ CAUTION

Do not mount controller in the way of air bag deployment!

B. Route both wire harnesses into truck cab through firewall (it maybe necessary to drill holes). Insulate hole to avoid water leaks.

C. Insure no wires are nicked or damaged during installation.

D. Connect the 4-pin connector on the wire harness to the control box 4-pin connector.

E. Connect the 2-pin connector on the power cable to the control box mating connector.

F. Connect wire harness single connectors to control box connectors.

G. Connect fuse connector to the fuse terminal or ignition switch (5 AMP max).

H. Lay out a path for the power cable to the battery, use quick ties to secure power cable. DO NOT CONNECT TO BATTERY AT THIS TIME!

I. Lay out path for wire harness to the rear of the vehicle. Stay clear of the exhaust system. Excess heat can damage the wire harnesses. Use quick ties to secure harness to underbody.

J. Connect the wire harness to the motors and vibrator. Make sure wire colors on wire harness match colors on the motor.

K. Thoroughly clean battery terminals. Make sure battery terminals have no tarnish or corrosion. DO NOT CONNECT WIRE HARNESS TO DAMAGED OR CORRODED TERMINALS! IT MAY RESULT IN OVERHEATING, LOST POWER AND POTENTIAL CONTROLLER DAMAGE! Install the circuit breaker within 12" from the battery. Connect red wire from cable 3035935 and battery cable 3001379 to circuit breaker according to the breaker markings. Connect the power cable and battery cable directly to the battery. Make sure connection to battery terminals is good and tight. Loose connection to battery terminals will result in sparking, overheating and possible battery damage!

L. Insure all functions of the controller are working properly.

M. Observe auger/ chain moving in proper direction. If direction is wrong reverse wires between Motor and Wire Harness.

N. Optional spot light (5 AMP max) can be installed on spreader. Use utility light kit part number 3018009. Remove cap from single white wire. Connect light to this wire and the trucks frames known ground (negative).

⚠ IMPORTANT

Make sure all wires securely attached to vehicle or spreader. Use wire ties and/or wire clamps to attach wires. All excess wires must be rolled into bundles and attached to vehicle or spreader

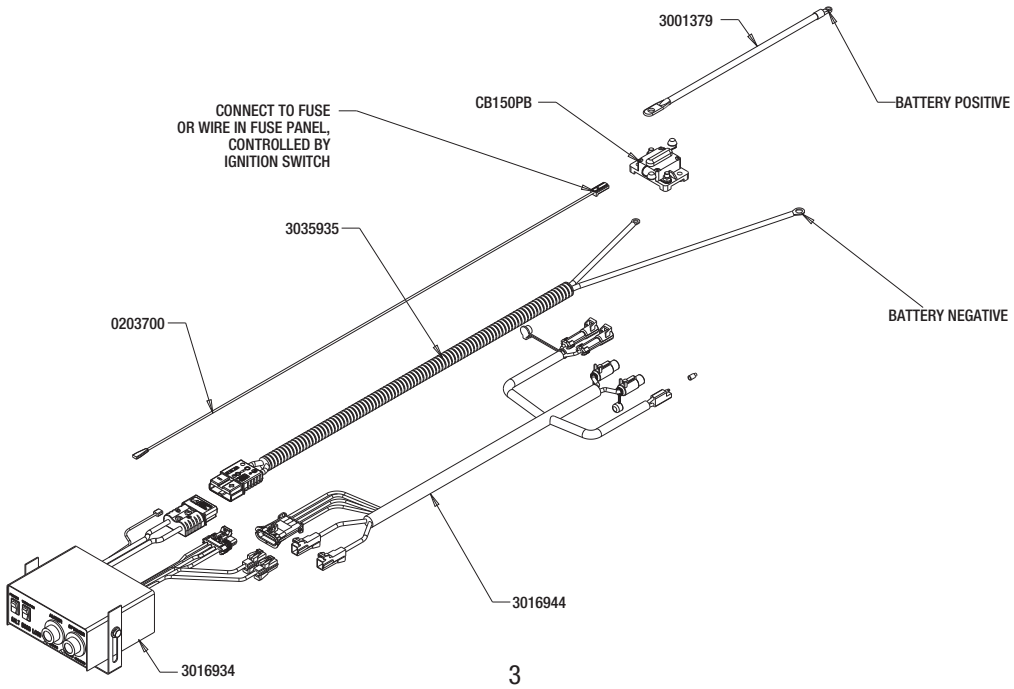

Spreader Operation

1. PRO2500 is equipped with a dual independent speed controller. To start spreader, press “POWER” switch. Switch will be illuminated. Auger/ chain and spinner will start rotating. Auger and spinner can be adjusted independently.
2. To activate vibrator press “VIBRATOR” switch, vibrator switch will illuminate. Vibrator can operate continuously for 30 min max with 15 min brakes to avoid overheating.
3. To stop spreader press “ON-OFF” switch again.
4. PRO2500 controller is equipped with electronic overload and current spike protection. Controller is not serviceable.
Controller has two LED lights: “ERROR” and “FLASH NUMBER”. If there is a problem the ERROR LED will illuminate and FLASH NUMBER LED will give a series of flashes. Count the number of flashes and refer to the troubleshooting guide provided with the controller. Additionally you can go online for the troubleshooting codes at https://snowdogg.com/media/3802/3026671_A.pdf
5. Spreading pattern can be controlled by repositioning of the baffles on the chute as shown in Fig. 6. Chute heights can be adjusted to accommodate different vehicle heights (Fig.6).

Fig. 6

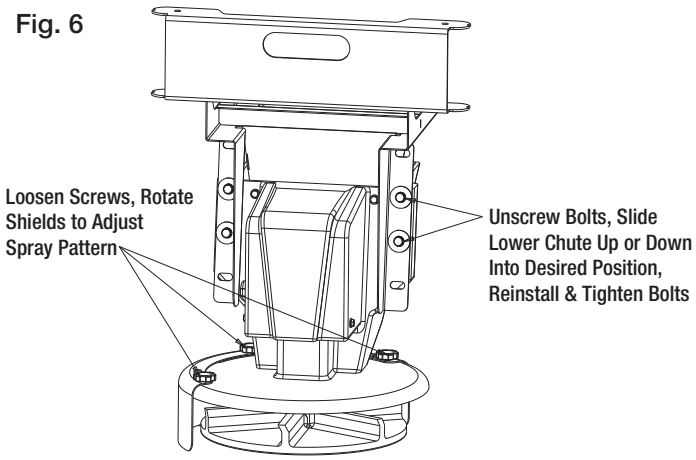

6. Check the Feed Chain tension periodically. To check the tension, measure in 21"-25" from the rear edge of the gear box mount. Push up on the chain with your hand. The conveyor chain should lift up 2"-3" off the conveyor chain guide or cross angles (Fig. 7).

Fig. 7

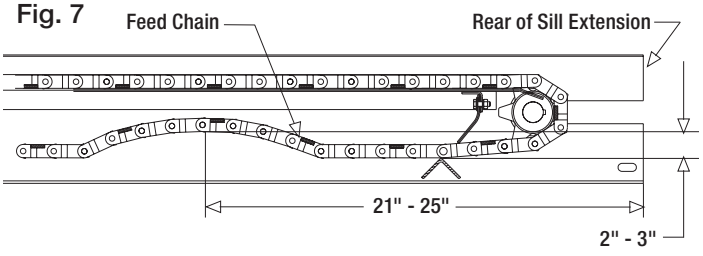

⚠ WARNING

Never attempt to lift spreader with material in hopper!

⚠ WARNING

Never leave material in hopper for extended period of time. Material can freeze, solidify and seriously damage the spreader

Spreader Materials

⚠ IMPORTANT

Only use dry salt, sand, sand/salt, or cinder/salt mixes in the spreader. Other materials could cause damage to the machine.

The density of materials that can be loaded into the spreader varies and therefore so will the amount of a given material that can be carried by the spreader before the maximum load rating is reached.

⚠ IMPORTANT

When filling the spreader, do not exceed the gross-vehicle-weight rating (GVWR) or gross-axle-weight rating (GAWR).

1. Ensure that the spreader is securely mounted to the vehicle and that the top screen is installed and secured in the hopper.
2. Remove the tarp, if used.
3. Determine the amount of material that you can safely transport using your vehicles GVWR/GAWR and the following table on page 1.
4. Fill the spreader evenly with your material, making sure not to fill past the top of the hopper.

⚠ IMPORTANT

Overfilling the hopper could damage the spreader & your vehicle.

Spreader Maintenance

1. Wash spreader after every use. Make sure no material is left under auger/ chain and/or inside trough.
2. Inspect and retighten fasteners after every 5-7 hours of operation.
3. Lubricate bearings every 7-10 hours of operation using general automotive grease.
4. Inspect terminals/connectors every time you disconnect spreader from wire harness. Apply thin layer of dielectric grease on terminals. If any tarnish/corrosion is found, clean terminals and apply dielectric grease.
5. Use dielectric grease on all electrical connectors before an electrical connection is made or after connector is disconnected
6. Empty the spreader of all ice control materials when not in use. Wash out the spreader to prevent material builds up.
7. It is recommended to cover spreader with the tarp during storage periods.

End of Season Maintenance

1. Wash spreader. Make sure no material or residue is left in and outside the hopper.
2. Lubricate bearing using general automotive grease.
3. Inspect wire harness, connectors for broken insulation, missing components. Replace if necessary.
4. Apply dielectric grease on all electrical connectors.
5. Store hopper indoors, in a dry, cool place.
6. Remove controller from truck. Store controller indoors, in a dry cool place.
7. Inspect wire near connectors. Check for broken or missing insulation. Check for tarnished or corroded wires. Trim corroded wires and replace connectors if necessary

Summer Storage

1. Apply dielectric grease or similar protective compound on all electrical connectors & protect them with caps before storage.
2. Disconnect and remove speed controller from vehicle and store it in dry and cool place. Protect controller from excessive heat and moisture.
3. Clean hopper and trough from all kinds of debris.
4. Remove, thoroughly lubricate and reinstall trough bearing.
5. Protect hopper from excessive temperatures during summer storage.

Accessories

PRO2500 is supplied with tarp 3030857. To insure proper tarp operation, attach tarp to all hopper posts as shown below.

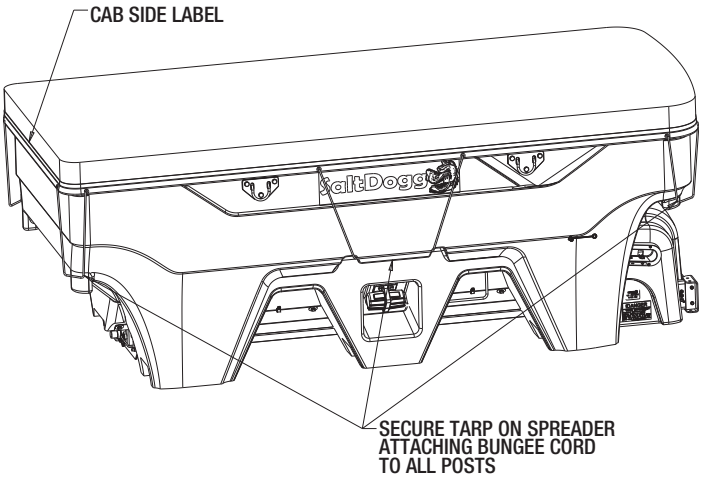

PRO2500 SPREADER WARRANTY INFORMATION

This warranty replaces all previous warranties and no employee of this company is authorized to extend additional warranties, or agreements, or implications not explicitly covered herein.

Buyers Products Company warrants all parts of the product to be free from defects in material and workmanship for a period of two (2) years. Parts must be properly installed and used under normal conditions. Normal wear is excluded.

Any part, which has been altered, including modifications, misuse, accident, or lack of maintenance will not be considered under this warranty.

The sole responsibility of Buyers Products Company under this warranty is limited to repairing or replacing any part(s), which are returned, prepaid, 30 days after such defect is discovered, and returned part(s) are found to be defective by Buyers Products Company.

Authorization from Buyers Products Company must be obtained before returning any part. The following information must accompany defective parts returned to Buyers Products Company: RMA #, spreader model, serial number, date installed, and distributor from whom purchased.

Buyers Products Company shall not be liable for damage arising out of failure of any unit to operate properly, or failure, or delay in work, or for any consequential damages. No charges for transportation or labor performed on any part will be allowed under this warranty.

Repair Parts - Standard Chute Assembly Part # 3031475

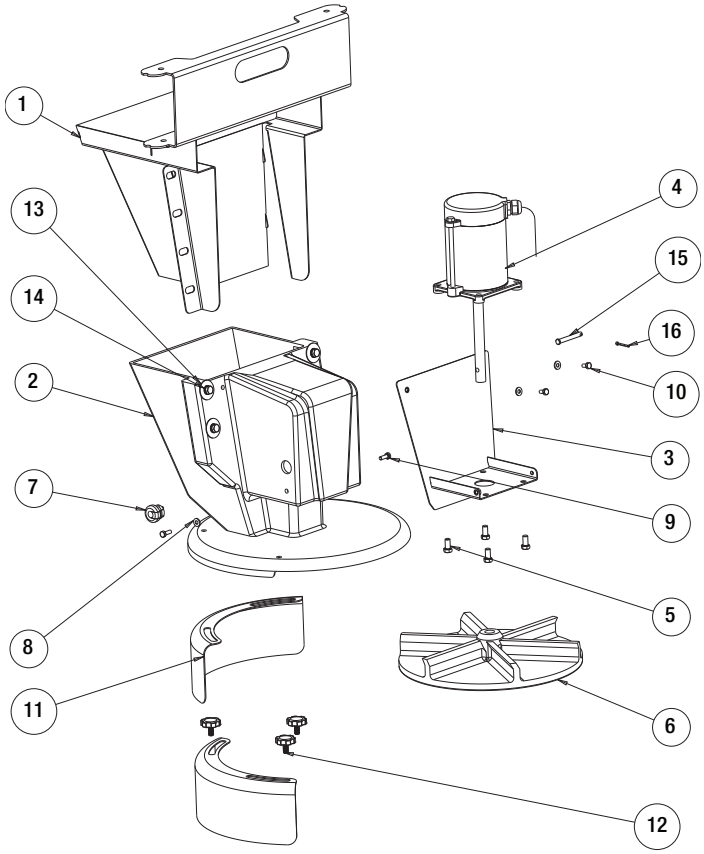

Bill of Materials

ITEM	PART NO.	QTY.	DESCRIPTION
1	3030868	1	UPPER CHUTE WELDMENT
2	3030930	1	CHUTE OUTER, POLY
3	3030908	1	MOTOR MOUNT CHUTE
4	3030907	1	MOTOR 12 VDC, .5 HP SPINNER
5	FCS038016075SS	8	SCREW, HHC-3/8-16 X 3/4 SST
6	3012393	1	SPINNER, 14" POLY CW
7	3025065	1	BUSHING STRAIN RELIEF
8	FWF025063007SS	4	WASHER, FLAT 1/4 SAE SS
9	FCS025020075SS	2	SCREW, CAP 1/4-20 X 3/4 SST
10	3008549	2	SCREW,HEXHD CAP 1/4-20X.5 SST
11	3030927	2	SHIELD, CHUTE
12	3031755	3	PLASTIC HEAD THUMB SCREW 3/8-16X3/4 SST
13	3007115	4	WASHER, FLAT 3/8 X 1.5 X.048 SST
14	FWL038069009SS	4	WASHER, LOCK RHS-3/8 SST
15	3007113	1	PIN, CLEVIS, 5/16 X 2-1/2, .141 HOLE ZN
16	3014994	1	PIN,COTTER,1/8IN X 1IN SST

Repair Parts - PRO2500 Auger Hopper Assembly

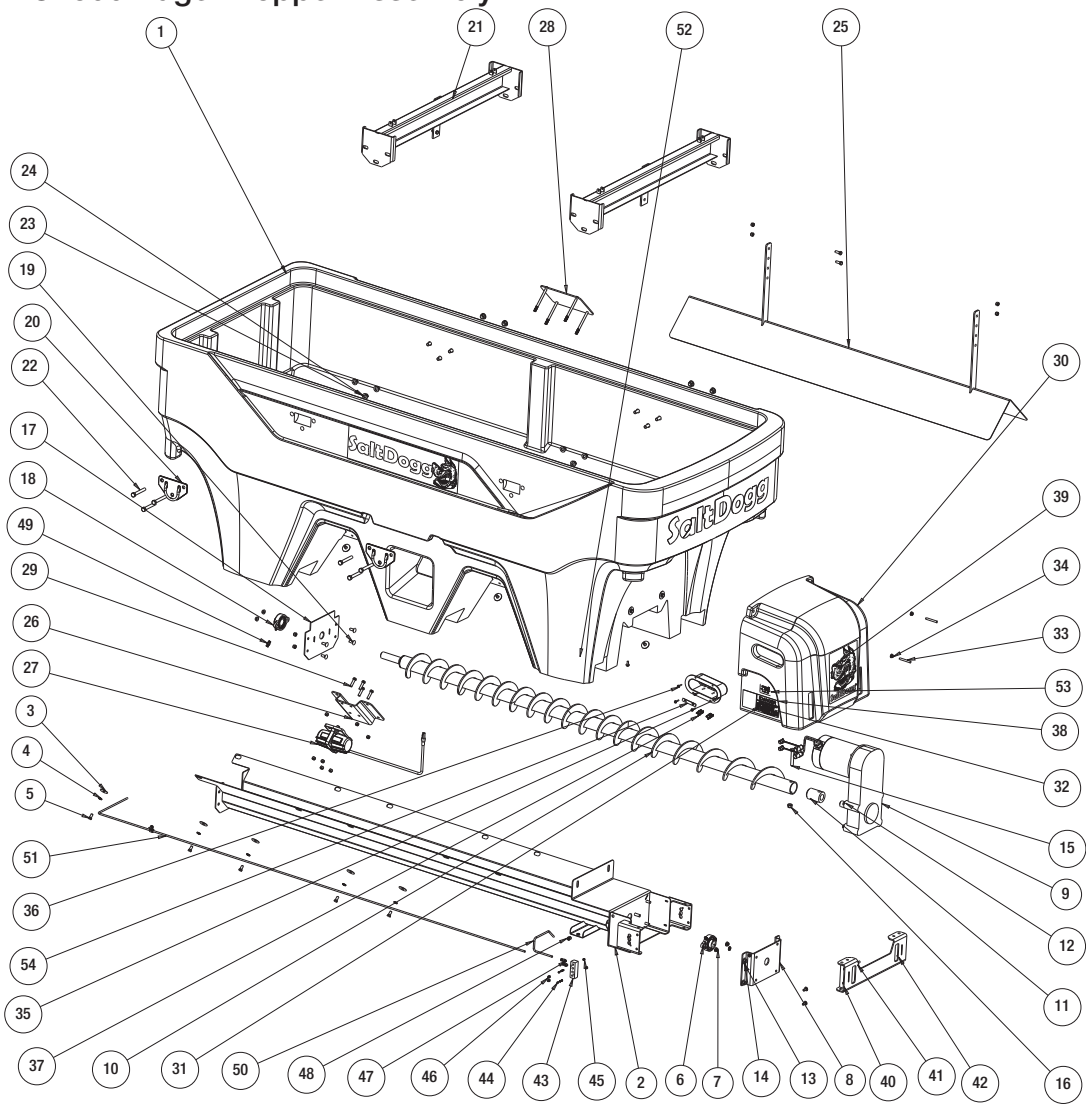

Bill of Materials

ITEM	PART NO.	QTY.	DESCRIPTION
1	3030763	1	HOPPER PRO2500
2	3032999	1	TROUGH WELDMENT PRO2500
3	3007115	12	WASHER, FLAT 3/8 X 1.5 X.048 SST
4	FWL038069009SS	16	WASHER, LOCK RHS-3/8 SST
5	FCS038016075SS	12	SCREW, HHC-3/8-16 X 3/4 SST
6	1410200	1	BEARING, FLANGED 1-1/8"
7	3001255	4	NUT, HEX FLNG-3/8-16 SST
8	3033003	1	SPACER, GEAR MOTOR
9	3024575	1	GEAR MOTOR CONVEYOR 12 VDC
10	3033660	1	AUGER PRO 5.25 VARIABLE LH
11	3033663	1	SLEEVE, AUGER ADAPTER
12	FCS038016100SS	8	SCREW, HHC 3/8-16 X 1 304 SST
13	FWF038100007SS	4	WASHER, FLAT 3/8 USS SST
14	FNE038016044SS	20	NUT, NYLOCK 3/8-16 X 7/16 SST
15	3001250	1	SCREW, HHC-1/2-13 X 3 SST
16	FNE050013053SS	1	NUT, NYLOCK 1/2-13 SS
17	3033070	1	BRACKET BEARING FRONT
18	9240086	1	BEARING, 1-1/4 FLANGE 2 HOLE
19	FCB037516100SS	4	BOLT, 3/8-16 X 1 CARRIAGE SST
20	3022220	4	TIE-DOWN WELDMENT
21	3030854	2	CROSS MEMBER
22	3005140	12	SCREW, HH1/2-13X 3.5, GR 5 ZN
23	FWF050106010	12	WASHER, FLAT 1/2" SAE ZINC
24	FNE050013053	12	NUT, NYLOCK 1/2-13 ZINC
25	3030863	1	INVERTED VEE, PRO2500
26	3031173	1	BRACKET VIBRATOR
27	3007416	1	VIBRATOR 200 LBS 12 VDC

ITEM	PART NO.	QTY.	DESCRIPTION
28	3031176	1	PLATE WELDMENT, VIBRATOR
29	FCS038016150SS	4	SCREW, HX HD CAP 3/8-16 X 1-1/2 SST
30	3031169	1	SHROUD
31	FWF025063007SS	2	WASHER, FLAT 1/4 SAE SS
32	FCS025020075SS	2	SCREW, CAP 1/4-20 X 3/4 SST
33	3033165	2	STUD THREADED 5/16-18 X 2.5 SST
34	3006719	2	NUT, HEX FLANGE - 5/16-18 SS
35	3031203	1	MOUNT CONNECTORS
36	3007522	7	SCREW, SHEET MTL #12x1.0 HEX WASHER HD SS'f
37	3031276	2	CLIP ATTACHMENT, CONNECTOR DEUTSCH
38	3032591	1	DECAL, DANGER, MOVING CONVEYOR/AUGER
39	3032595	1	DECAL, CAUTION, MOUNTING
40	3033076	1	CHUTE ATTACHMENT
41	3012144	4	BOLT, CARRIAGE, 5/16-18 X 1 SST
42	FNE031018034SS	4	NUT, NYLOCK 5/16-18 SS
43	3035346	1	RIGHT ANGLE JUNCTION BLOCK
44	3035357	2	SCREW SOCKET HD, RND 8-32X 1.50 SST
45	3035358	2	NUT, NYLOCK 8-32 SST, BLACK OXIDE
46	800	2	GREASE FITTING, 1/4 STD
47	3035347	2	GREASE FITTING 1 MTU BE 1/8 NPT STRAIGHT
48	3035742	2	BUSHING SNAP THICK PANEL
49	3035344	2	GREASE FITTING 1 MTU BE 1/4-28 MALE STRAIGHT
50	3035359	1	GREASE TUBE REAR BEARING AUGER
51	3036016	1	GREASE TUBE FRONT BEARING AUGER
52	4375	3	CLAMP, HOSE .4375, 9/32 HOLE
53	3035854	1	LABEL PATENT
54	3033172	1	DECAL CONNECTION

Repair Parts - PRO2500CH Chain Hopper Assembly

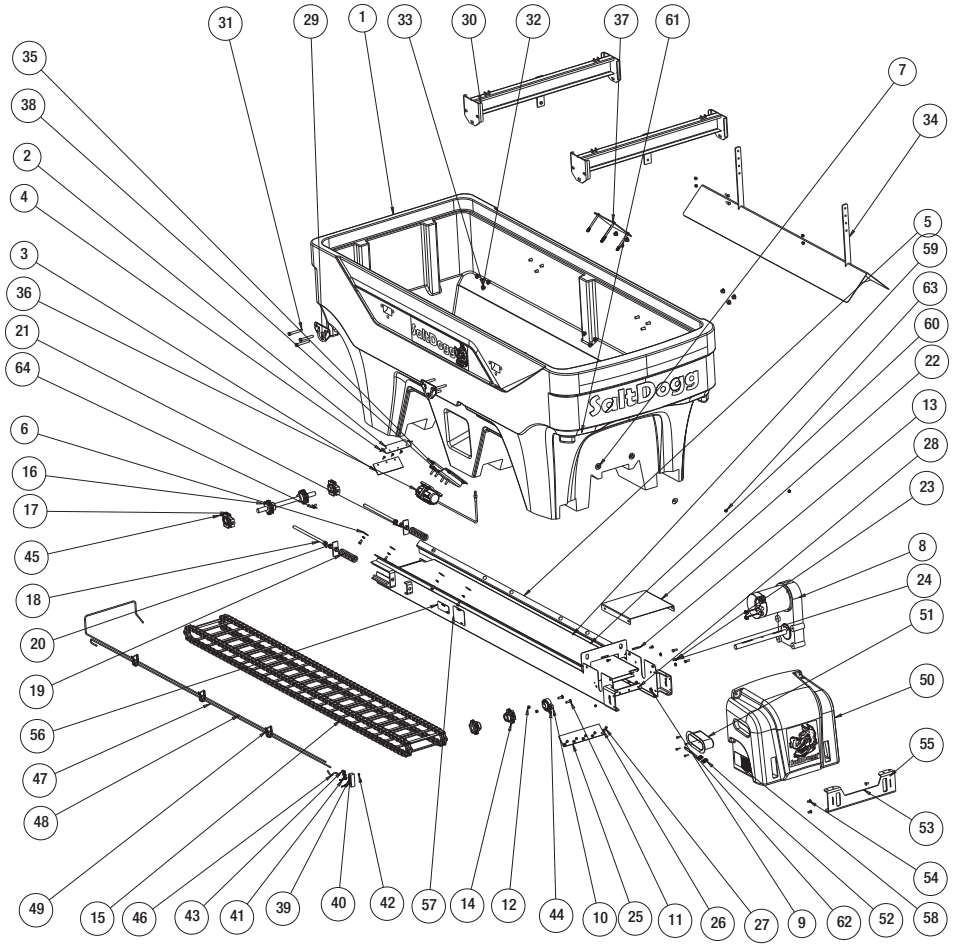

Bill of Materials

ITEM	PART NO.	QTY.	DESCRIPTION
1	3030763	1	HOPPER PRO2500
2	3033164	1	WIPER BRACKET
3	3035269	1	WIPER BELT, FRONT
4	3007522	12	SCREW, SHEET MTL #12x1.0 HEX WASHER HD SS'
5	3027772	1	TROUGH CHAIN PRO500
6	3007115	12	WASHER, FLAT 3/8 X 1.5 X.048 SST
7	FWL038069009SS	16	WASHER, LOCK RHS-3/8 SST
8	3013821	1	GEAR MOTOR CONVEYOR 12 VDC
9	FCS038016100SS	8	SCREW, HHC 3/8-16 X 1 304 SST
10	1410200	1	BEARING, FLANGED 1-1/8"
11	3031483	2	BOLT, 3/8-16 X 1 CARRIAGE SHORT NECK SST
12	FNE038016044SS	14	NUT, NYLOCK 3/8-16 X 7/16 SST
13	KS402	2	KEY, 1/4 X 1/4X2
14	1410250	2	SPROCKET, 6 TOOTH PINTLE CHAIN
15	1401100P	1	CHAIN ASSY D662 122 LINKS
16	3008571	1	SHAFT IDLER, ASSEMBLY
17	1411001	2	BEARING, IDLER TAKE UP
18	3023046	2	BOLT, WELDED TAKE UP
19	3023022	2	SPRING CHAIN TENSION
20	3031199	2	TAKE-UP NUT WELDMENT
21	FNH063011054SS	2	NUT, HH 5/8-11 X 17/32 HIGH SST
22	3031195	1	CHAIN COVER
23	FWL025050006SS	4	WASHER, 1/4 IN. SPRING LOCK SST
24	FCS025020075SS	6	SCREW, CAP 1/4-20 X 3/4 SST
25	1410241	1	WIPER BELT, HOPPER
26	FWF025063007SS	7	WASHER, FLAT 1/4 SAE SS
27	3008549	5	SCREW,HEXHD CAP 1/4-20X.5 SST
28	FNE025020031SS	5	NUT, NYLON INSERT 1/4-20 SST
29	3022220	4	TIE-DOWN WELDMENT
30	3030854	2	CROSS MEMBER
31	3005140	12	SCREW, HH1/2-13 x 3.5, GR 5 ZN
32	FWF050106010	12	WASHER, FLAT 1/2" SAE ZINC
33	FNE050013053	12	NUT, NYLOCK 1/2-13 ZINC

ITEM	PART NO.	QTY.	DESCRIPTION
34	3030863	1	INVERTED VEE, PRO2500
35	3031173	1	BRACKET VIBRATOR
36	3007416	1	VIBRATOR 200 LBS 12 VDC
37	3031176	1	PLATE WELDMENT, VIBRATOR
38	FCS038016150SS	4	SCREW, HX HD CAP 3/8-16 X 1-1/2 SST
39	3035346	1	RIGHT ANGLE JUNCTION BLOCK
40	800	3	GREASE FITTING, 1/4 STD
41	3035357	2	SCREW SOCKET HD, RND 8-32X 1.50 SST
42	3035358	2	NUT, NYLOCK 8-32 SST, BLACK OXIDE
43	3035347	3	GREASE FITTING 1 MTU BE 1/8 NPT STRAIGHT
44	3035344	1	GREASE FITTING 1 MTU BE 1/4-28 MALE STRAIGHT
45	3035345	2	GREASE FITTING 1 MTU BE 1/4-28 MALE 90 DEGREE
46	3035348	1	GREASE HOSE REAR BEARING
47	3036051	1	GREASE HOSE FRONT DR SIDE
48	3036052	1	GREASE HOSE FRONT PS SIDE
49	5000	3	HOSE CLAMP, .375 DIA
50	3031169	1	SHROUD
51	3031203	1	MOUNT CONNECTORS
52	3031276	2	CLIP ATTACHMENT, CONNECTOR DEUTSCH
53	3033076	1	CHUTE ATTACHMENT
54	3012144	4	BOLT, CARRIAGE, 5/16-18 X 1 SST
55	FNE031018034SS	4	NUT, NYLOCK 5/16-18 SS
56	1499035	2	LABEL, WARNING 3
57	1499030	1	LABEL, CAUTION 1 (PAYLOAD)
58	3032591	1	DECAL, DANGER, MOVING CONVEYOR/AUGER
59	3032593	1	DECAL, DANGER, CONVEYOR
60	3032595	1	DECAL, CAUTION, MOUNTING
61	3033165	2	STUD THREADED 5/16-18 X 2.5 SST
62	3033172	1	DECAL CONNECTION
63	3006719	2	NUT, HEX FLANGE - 5/16-18 SS
64	FCS038016075SS	12	SCREW, HHC-3/8-16 X 3/4 SST

Repair Parts - PRO2500 Spreader

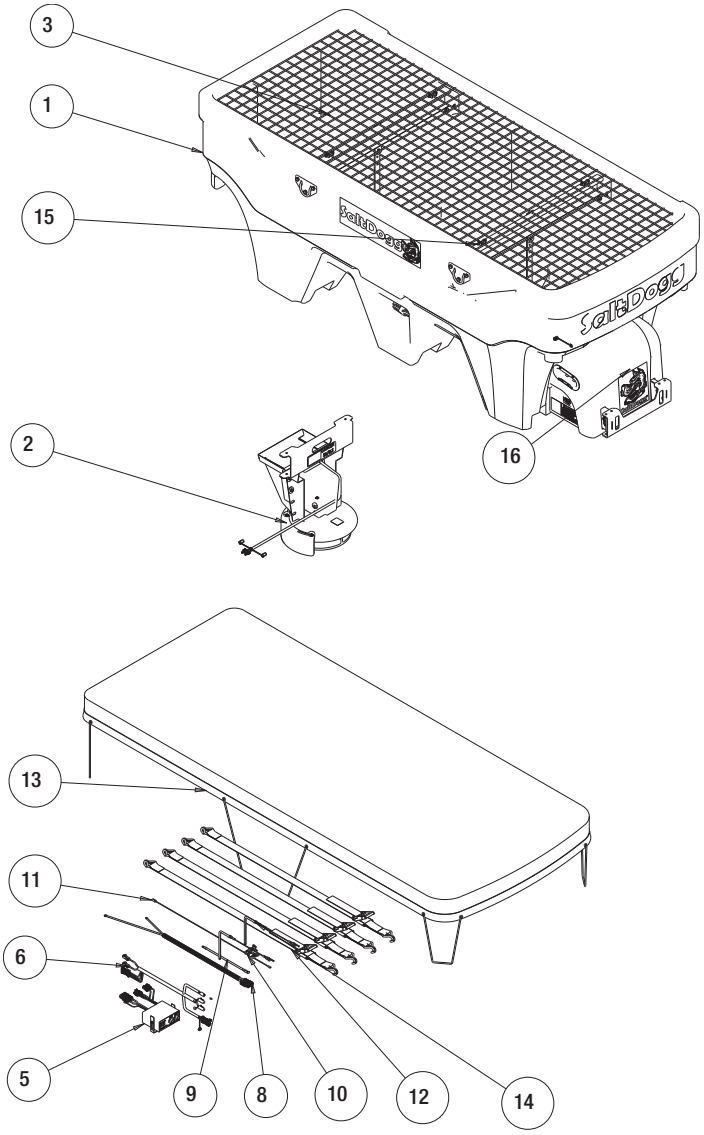

Bill of Materials

ITEM	PART NO.	QTY.	DESCRIPTION
1	3033301	1	HOPPER ASSEMBLY PRO2500
2	3031475	1	CHUTE SWING ADJ
3	3030853	1	TOP SCREEN PRO2500
4	3031797	1	HARDWARE KIT PRO2500
5	3016934	1	CONTROLLER SPEED 12 VDC, 60 AMP
6	3030628	1	WIRE HARNESS MAIN
7	3035938	1	KIT POWER CABLE REPLACES 3016943
8	3035935	1	POWER CORD
9	3001379	1	CABLE, SCH BATTERY 14 IN. (RED)
10	CB150PB	1	BREAKER, 150 AMP.
11	0203700	1	WIRE ASSEMBLY, 36 LONG
12	14965051	1	HOLD DOWN KIT, SPREADER (4 STRAPS)
13	3030857	1	TARP PRO2500
14	3033174	2	PIN, CHUTE ATTACHMENT
15	66050	4	SNAPPER PIN, 1/4 X 2, YLW ZINC
16	3036015	1	LABEL SERIAL NUMBER PRO2500

Repair Parts - PRO2500CH Spreader

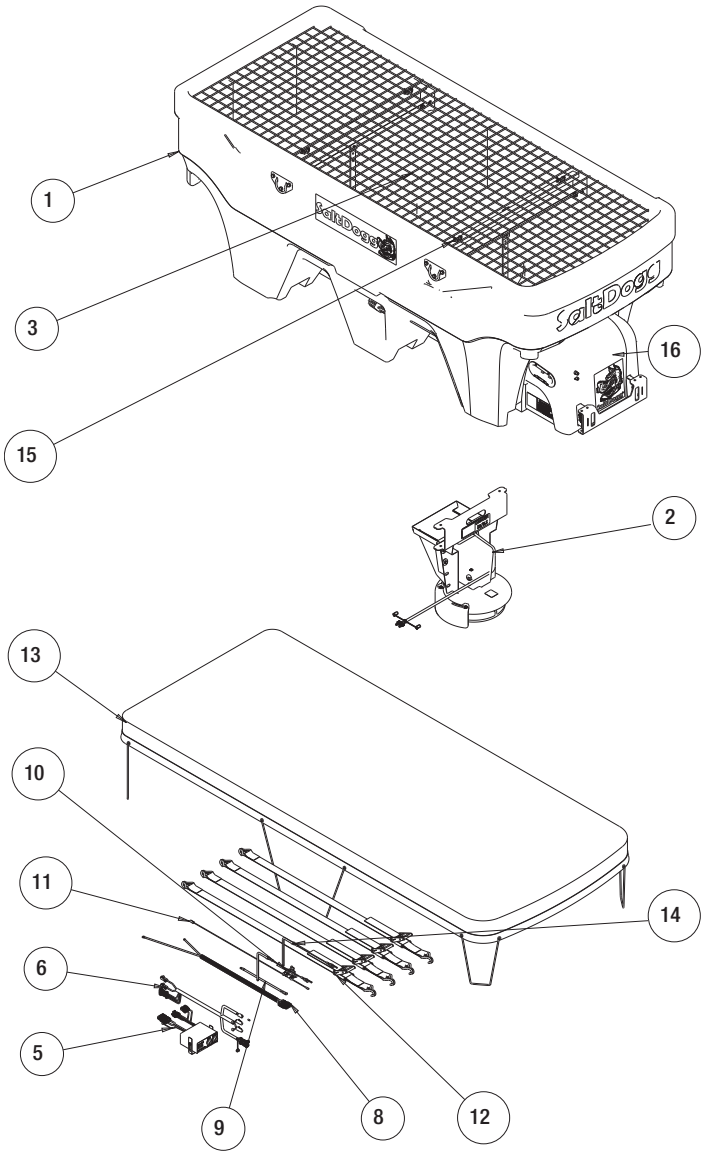

Bill of Materials

ITEM	PART NO.	QTY.	DESCRIPTION
1	3030766	1	HOPPER ASSEMBLY PRO2500
2	3031475	1	CHUTE SWING ADJ
3	3030853	1	TOP SCREEN PRO2500
4	3031797	1	HARDWARE KIT PRO2500
5	3016934	1	CONTROLLER SPEED 12 VDC, 60 AMP
6	3030628	1	WIRE HARNESS MAIN
7	3035938	1	KIT POWER CABLE REPLACES 3016943
8	3035935	1	POWER CORD
9	3001379	1	CABLE, SCH BATTERY 14 IN. (RED)
10	CB150PB	1	BREAKER, 150 AMP.
11	0203700	1	WIRE ASSEMBLY, 36 LONG
12	14965051	1	HOLD DOWN KIT, SPREADER (4 STRAPS) BLA
13	3030857	1	TARP PRO2500
14	3033174	2	PIN, CHUTE ATTACHMENT
15	66050	4	SNAPPER PIN, 1/4X2, YLWZINC
16	3036015	1	LABEL SERIAL NUMBER PRO2500