www.buyersproducts.com
Phone (440) 974-8888
Fax 800-841-8003

# Installation Instructions

## LT46 **Hand Tool Rack**

*for use with LT45 Storage Basket*

### Before You Begin Installing:

**1.** Read and understand these instructions completely.
**2.** Verify that you have received all the parts listed in the bill of materials for your model number.

**⚠ CAUTION**

Always wear safety glasses when using power tools.

**Tools Required:**

- (2) 9/16" Wrenches and/or Sockets
- (2) 1/2" Wrenches and/or Sockets
- Electric Drill

**1.** Using four 3/8" – 16 x 2.25" carriage bolts (4A), the four 3/8" washers (4B), and four nylock nuts (4C), mount the posts (1) onto the front or back panel of the LT45 basket. The posts should be spaced 35" apart from hole-to-hole. (Figure 2)
**2.** Using four 3/8" – 16 x 2.25" carriage bolts and four nylock nuts, attach the top tool holder (3) to the top of the posts. (Figure 1)

**⚠ WARNING**

Do not overtighten the nylock nuts for the top and bottom angles, as overtightening can lead to deformation.

**Fig. 1**

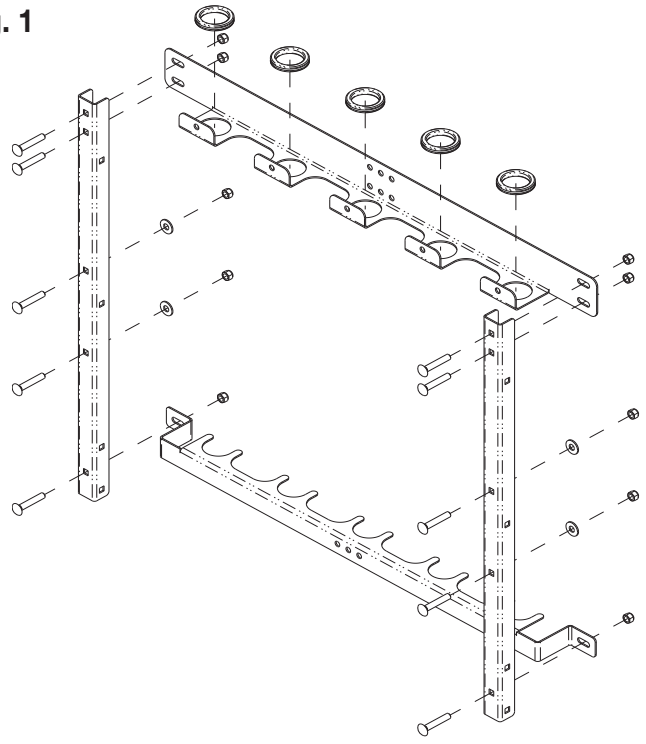



**3.** Mount the bottom tool holder (2) to the posts using the four remaining 3/8" – 16 x 2.25" carriage bolts and four nylock nuts. (Figure 1)
**4**. Insert the five grommets (4D) into the holes on the top tool holder (3).

**Fig. 2**

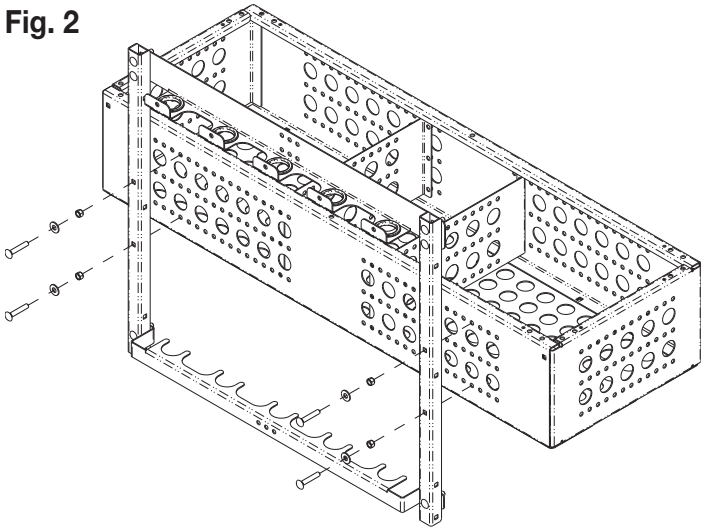



—continued

## Bill of Materials

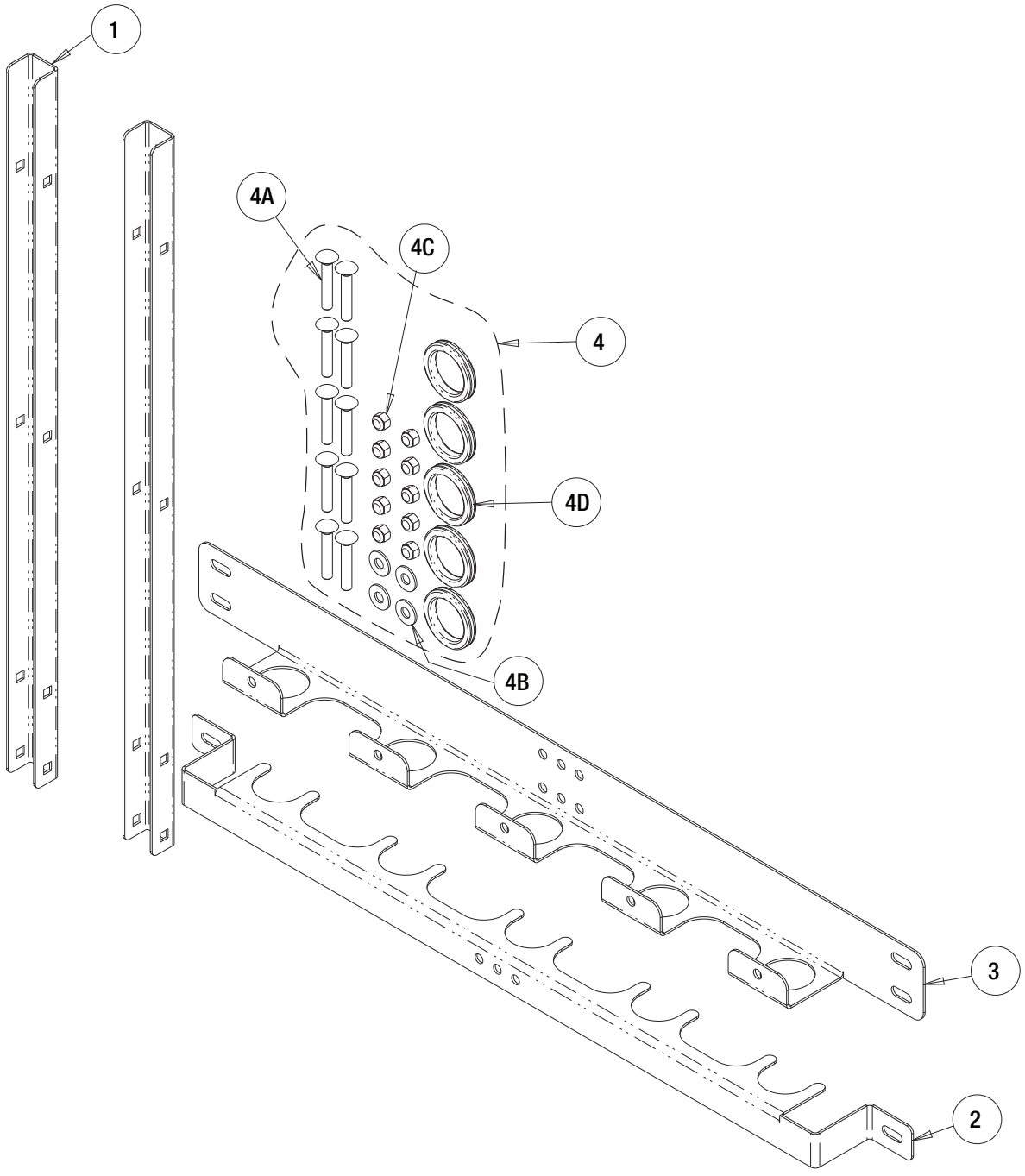


| ITEM | PART NO. | QTY. | DESCRIPTION |
|---|---|---|---|
| 1 | 3045342 | 2 | POST, HAND TOOL RACK, LT46 |
| 2 | 3045338 | 1 | ANGLE, BOTTOM, TOOL HOLDER, LT46 |
| 3 | 3045337 | 1 | ANGLE, TOP, TOOL HOLDER, LT46 |
| 4 | 3045340 | 1 | HARDWARE KIT, HAND TOOL RACK, LT46 |
| 4A | FCB037516225 | 10 | CARRIAGE BOLT, 3/8-16X2-1/4, GR5 ZP |
| 4B | FWF038100007 | 4 | USS FLAT WASHER, 3/8 ZN PLATED |
| 4C | FNE038016044 | 10 | NYLOCK NUT, 3/8-16 ZN PLATED |
| 4D | 3004167 | 5 | 2" RUBBER GROMMET |

### Warranty

Buyers Products Co. warrants all truck/trailer hardware manufactured or distributed by it, to be free from defects in material and workmanship for a period of one year from date of shipment. Parts must be properly installed and used under normal conditions. Any product which has been altered, including modification, misuse, accident or lack of maintenance will not be considered under warranty. Normal wear is excluded. The sole responsibility of Buyers Products Co. under this warranty is limited to repairing or replacing any part or parts which are returned, prepaid, and are found to be defective by Buyers Products Co. Authorization from Buyers Products Co. must be obtained before returning any part. No charges for transportation or labor performed on Buyers' products will be allowed under this warranty.