www.buyersproducts.com
Phone (440) 974-8888
Fax 800-841-8003

Installation Instructions

24" – 1744124 (black), 1744224 (white)
36" – 1744136 (black), 1744236 (white)
Open Top Cargo Baskets

Before You Begin Installing:

1. Read and understand these instructions completely.
2. Verify that you have received all the parts listed in the bill of materials.

Tools Required:

- 7/16" Wrench and/or Socket
- 9/16" Wrench and/or Socket
- Electric Drill
- 3/8" Drill Bit
- Tape Measure
- Safety Glasses and Gloves

⚠ CAUTION

Always wear safety glasses when using power tools.

⚠ WARNING

Check for locations of brake lines and electrical wiring etc., before drilling any holes. Any damage to trailer during installation is installer's full responsibility.

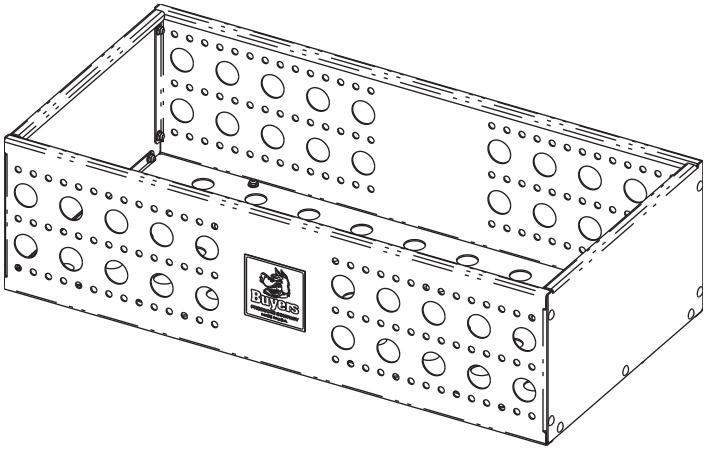

Fig. 1

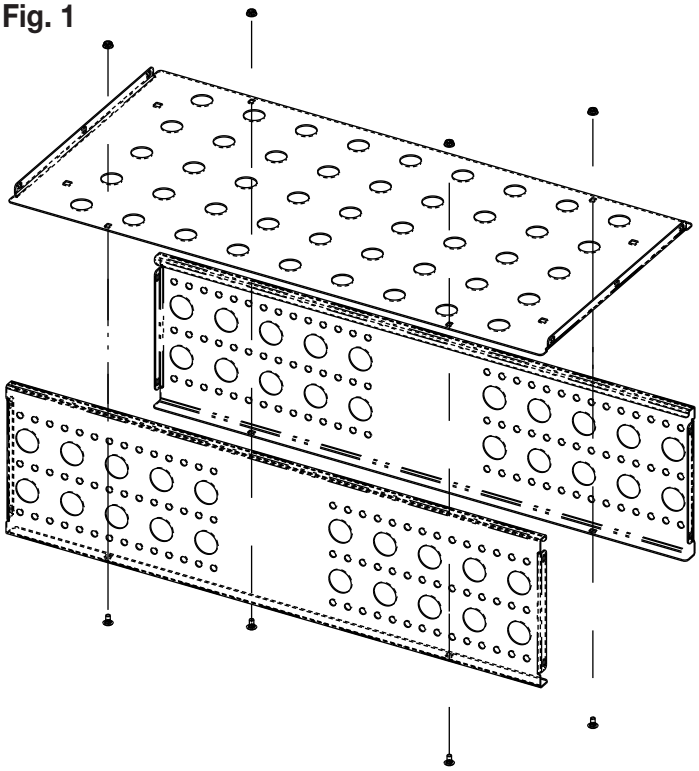

Installation

1. Building the Basket (Fig. 1, 2 and 3)

a. Attach the Side Panels (Item 2) to the Bottom Panel (Item 1) using the 1/4"-20x1/2 Carriage Bolts (Item 6A) and Flange Nuts (Item 6B).

b. Attach the End Panels (Item 3) to the Side Panels (Item 2) using the 1/4"-20x1/2 Carriage Bolts (Item 6A) and Flange Nuts (Item 6B). On the inside of one of the Side Panels; attach the Brace (Item 4) using the 1/4"-20x3/4 Carriage Bolts (Item 6E) instead of the 1/4"-20x1/2 Carriage Bolts.

—continued

Fig. 2

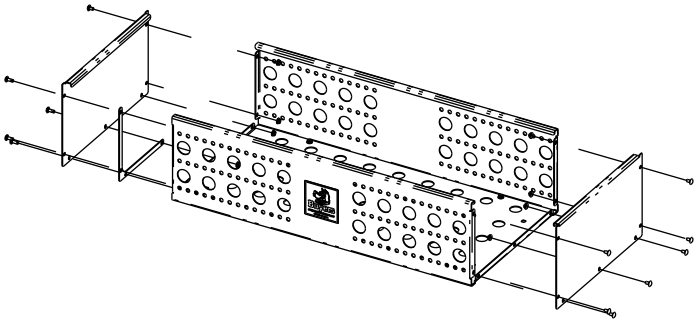

Fig. 3

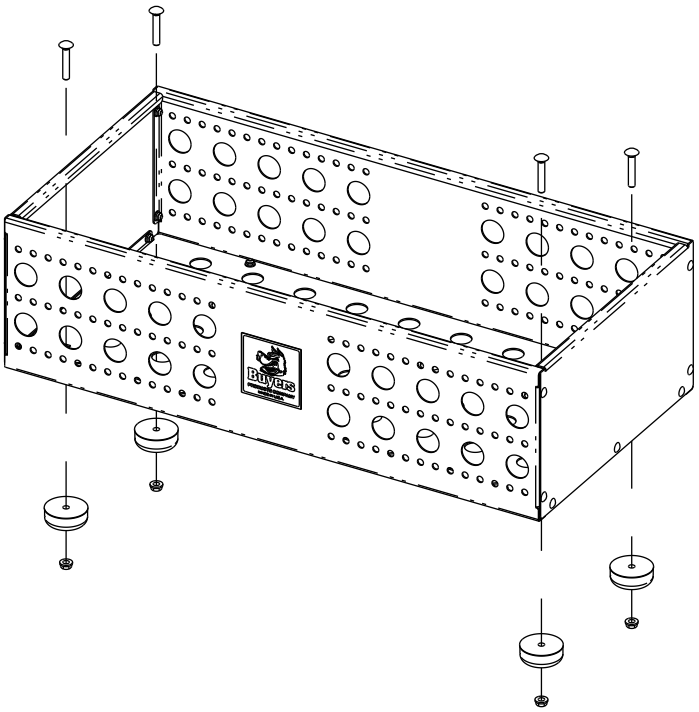

2. Connecting Two Baskets (Fig. 4)

a. To join two Baskets together in series, remove the End Panels (Item 3) from the sides of both Baskets that have the Brace (Item 4). Line up the holes on the open sides of the Baskets and use the 1/4"-20x3/4 Carriage Bolts (Item 6A) and Flange Nuts (Item 6B) from each hardware kit to attach them to each other. Make sure to attach both Braces, with each Brace on opposite sides diagonal from each other.

Fig. 4

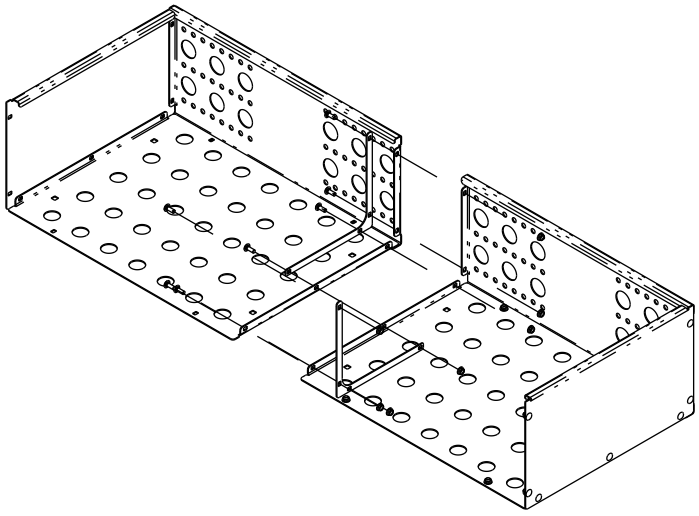

3. Installing the Basket (Fig. 5)

a. Use Fig. 5 as a starting point reference in determining mounting hole placement.

b. If new holes are needed, use the holes in the Basket to mark the mounting locations on the intended surface. Remove the Basket and drill the mounting holes.

c. Install the Basket using the 3/8"-16x2.25 Carriage Bolts (Item 6D) and Flange Nuts (Item 6C) through the bottom holes in the Bottom Panel (Item 1).

Fig. 5

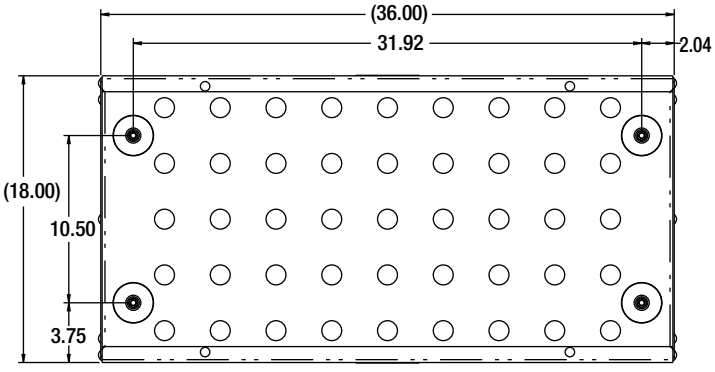

Parts List

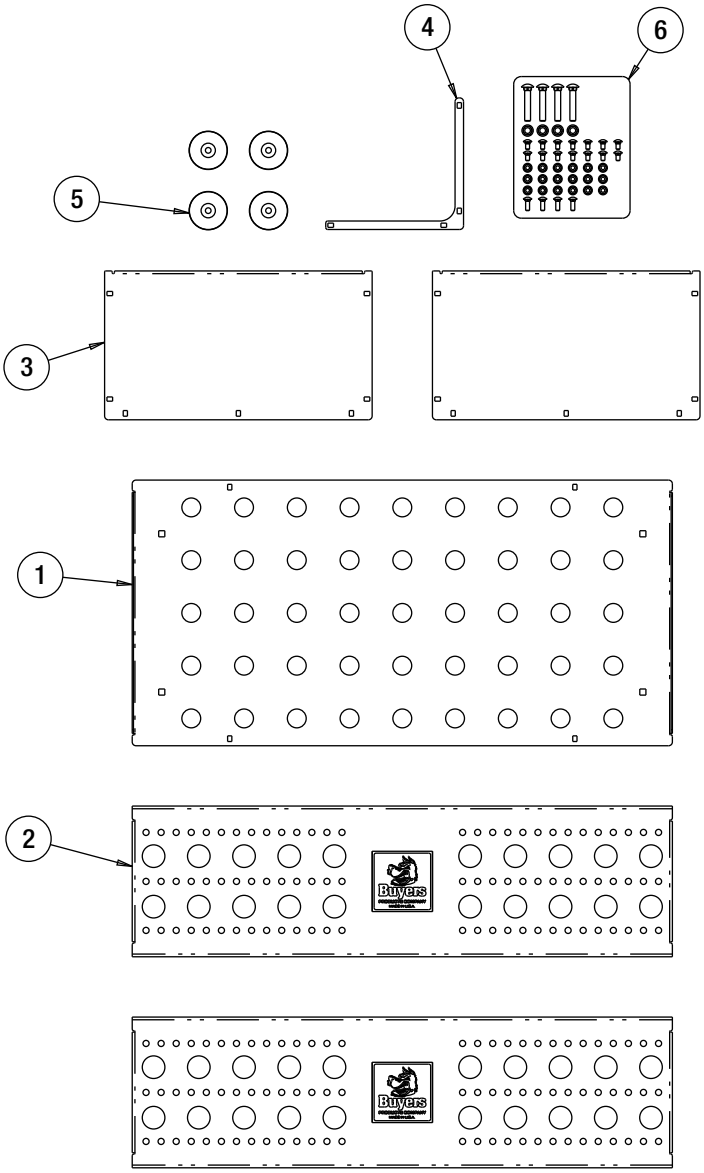

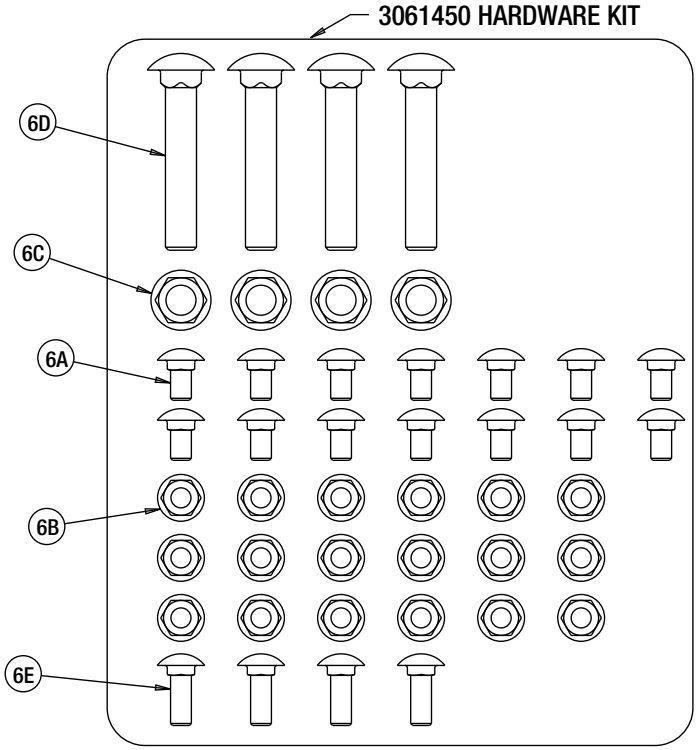

Parts List

ITEM	PART NO.	QTY.	DESCRIPTION
1	BOTTEM PANEL	1	BASKET, BOTTOM
2	SIDE PANEL	2	BASKET, SIDE
3	END PANEL	2	BASKET, END
4	BRACE	1	BASKET, BRACE
5	B1001	4	BUMPER, RUBBER, 2 1/2" ROUND
6	3061450	1	HDW KIT, CARGO BASKETS

	BLACK		WHITE	
	24in	36in	24in	36in
	1744124	1744136	1744224	1744236
BOTTOM PANEL	3061556	3061562	3061558	3061552
SIDE PANEL	3061557	3061563	3061559	3061553
END PANEL	3060381	3060381	3061554	3061554
BRACE	3060384	3060384	3061555	3061555

Hardware Kit - 3061450

ITEM	PART NO.	QTY.	DESCRIPTION
6A	FCB025020050SS	14	BOLT, CARRIAGE, 1/4-20 X 1/2, SST
6B	3014223	18	NUT, SERRATED FLANGE, 1/4-20, ZINC
6C	92401211	4	NUT, HEX, SERRATED FLANGE, 3/8-16, ZINC
6D	FCB037516225	4	BOLT,CARRIAGE 3/8-16X 2.25in,FULL THREAD GR5 ZP
6E	FCB025020075SS	4	BOLT, CARRIAGE, 1/4-20 X 3/4 SST

www.buyersproducts.com
Phone (440) 974-8888
Fax 800-841-8003

WARRANTY

Buyers Products Co. warrants all truck/trailer hardware manufactured or distributed by it, to be free from defects in material and workmanship for a period of one year from date of shipment. Parts must be properly installed and used under normal conditions. Any product which has been altered, including modification, misuse, accident or lack of maintenance will not be considered under warranty. Normal wear is excluded. The sole responsibility of Buyers Products Co. under this warranty is limited to repairing or replacing any part or parts which are returned, prepaid, and are found to be defective by Buyers Products Co. Authorization from Buyers Products Co. must be obtained before returning any part. No charges for transportation or labor performed on Buyers' products will be allowed under this warranty.