www.buyersproducts.com
Phone (440) 974-8888
Fax 800-841-8003

Installation Instructions

SK11 **Body-Up Indicator Kit**

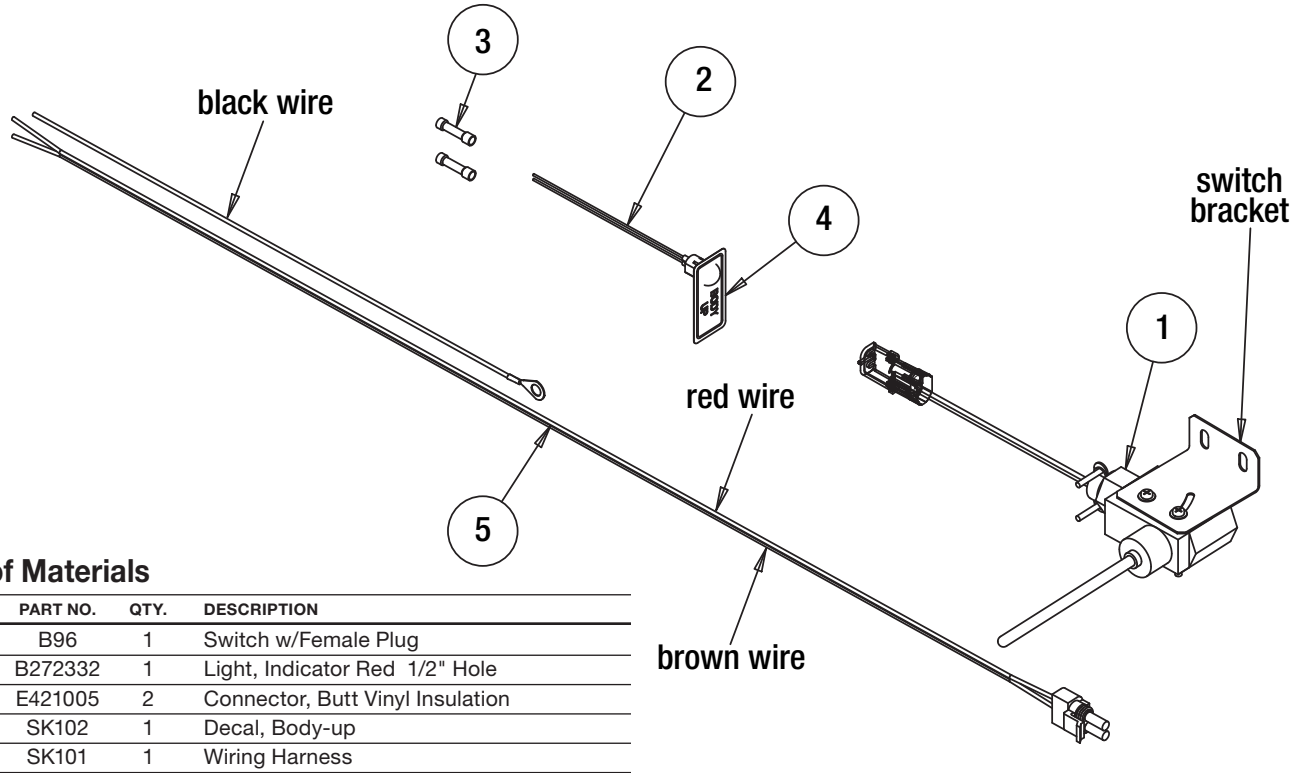

Bill of Materials

ITEM	PART NO.	QTY.	DESCRIPTION
1	B96	1	Switch w/Female Plug
2	B272332	1	Light, Indicator Red 1/2" Hole
3	E421005	2	Connector, Butt Vinyl Insulation
4	SK102	1	Decal, Body-up
5	SK101	1	Wiring Harness

Fig. 1

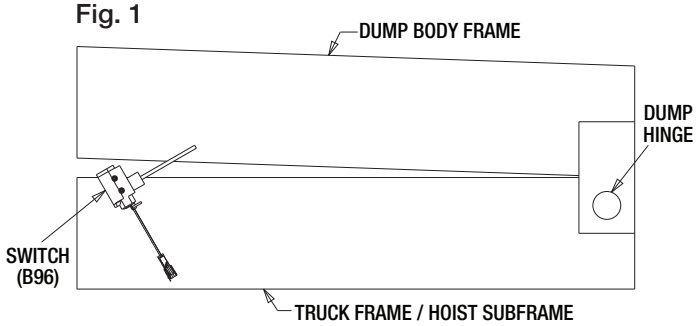

Fig. 2

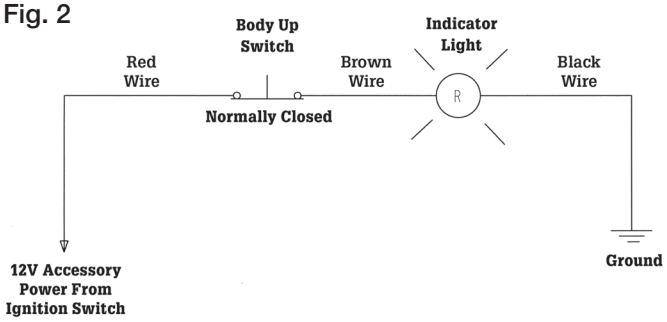

1. Select an area along truck frame no more than one foot from front where both the truck frame and the dump body frame are free of obstructions.
2. Clean both surfaces.
3. Mount switch bracket to stationary portion of hoist subframe. (Fig. 1).
4. Select an area on dash to mount warning light and decal. The location must be visible to driver while seated in the driver's seat. The light requires a ½" dia. hole. Before drilling, make sure there is nothing behind the area where the hole will be drilled.
5. Inspect the cab to see if an existing grommeted hole can be used to run wires into cab. If none is available, drill hole to run wires into cab.
6. Install rubber grommet to prevent wire damage.
7. Connect brown and black wire to light using butt connectors provided. Connect black wire to known ground. Connect red wire to hot side of ignition. Connect wire harness plug to switch plug (Fig. 2).
8. Adjust so that when the dump body is down the switch will be deactivated.

—continued

Typical Mounting Options

Mount so that switch is actuated when dump body is down and not actuated when dump body is raised.

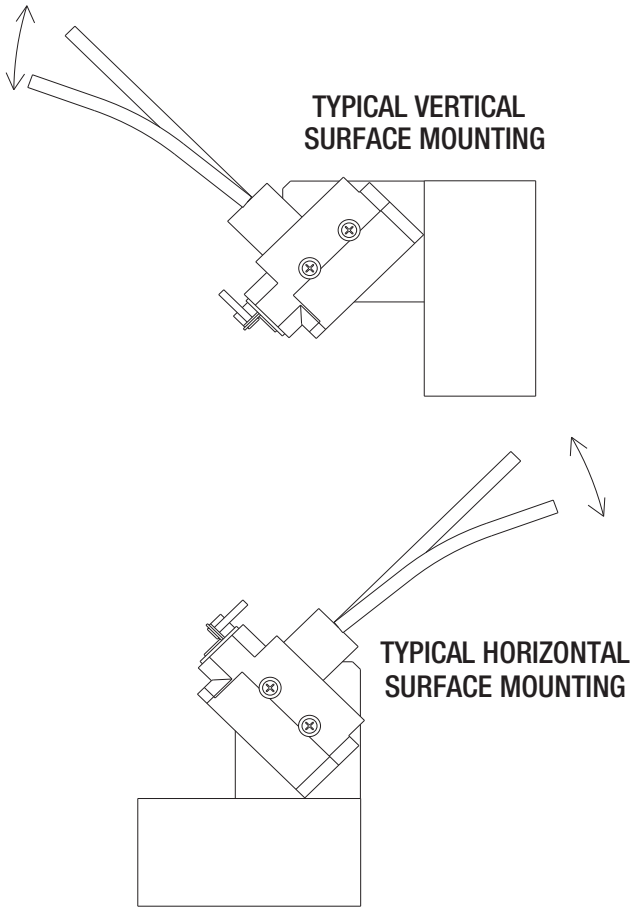

MOUNTING SHOWN IS FOR REFERENCE ONLY

Installer please forward this instruction sheet to vehicle owner/operator.

General Information:

These instructions are for your safety and the safety of the end user. Read them carefully until you understand them.

General Safety Information:

To prevent injury to yourself and/or damage to the equipment:

1. Read carefully all owners' manuals, service manuals, and/or other instructions.

2. Always follow proper procedures, and use proper tools and safety equipment.

3. Be sure to receive proper training.

4. Never work alone while under a vehicle or while repairing or maintaining equipment.

5. Always use proper components in applications for which they are approved.

6. Be sure to assemble components properly.

7. Never use worn-out or damaged components.

8. Always block any raised or moving device that may injure a person working on or under a vehicle.

9. When installing a Hydraulic Reservoir, always wear protective clothing and safety glasses.

10. Owner/Operator should periodically inspect reservoir, mounting brackets, and hardware as a routine maintenance

WARRANTY

Buyers Products Co. warrants all truck/trailer hardware manufactured or distributed by it, to be free from defects in material and workmanship for a period of one year from date of shipment. Parts must be properly installed and used under normal conditions. Any product which has been altered, including modification, misuse, accident or lack of maintenance will not be considered under warranty. Normal wear is excluded. The sole responsibility of Buyers Products Co. under this warranty is limited to repairing or replacing any part or parts which are returned, prepaid, and are found to be defective by Buyers Products Co. Authorization from Buyers Products Co. must be obtained before returning any part. No charges for transportation or labor performed on Buyers' products will be allowed under this warranty.