www.buyersproducts.com
Phone (440) 974-8888
Fax 800-841-8003

Installation Instructions

SL550ALP & SL551ALP
LED Beacon Light



⚠ WARNING

Do not look directly into LEDs while in operation; may cause momentary blindness and/or eye damage

Specs

- 12 LED's
- 12-24VDC
- 1 Amp (@ 12 volts)
- 3 flash patterns
  - -Rotating:125r/min
  - -Single flash: 125times/min
  - -Dual flash:250times/min

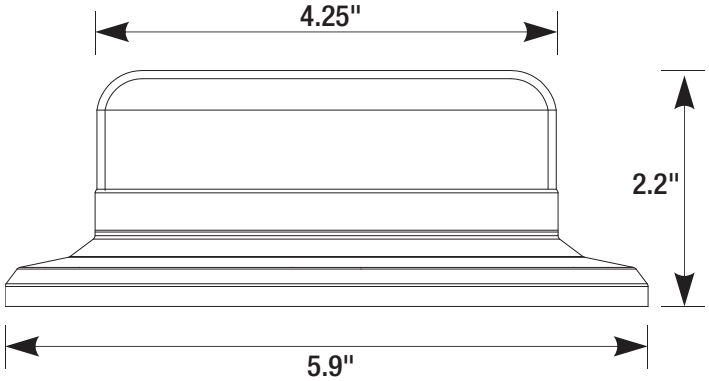

Flash Pattern (for SL551ALP only)

Open lens by turning counterclockwise. Press momentary button to change flash pattern (fig. 1). Close lens by turning clockwise. Make sure lens is securely tightened.

Fig. 1



Flash Pattern (for SL550ALP only)

Use the momentary flash pattern switch on the accessory power plug to change the flash pattern

WARRANTY

Buyers Products Company warranties all LED Strobe and LED Work Light products to the original owner against defects in workmanship and material for a period of five (5) years from the date of purchase unless otherwise specified. Buyers Products must review each warranty claim and reserves the right to offer a refund for the original sale price of the product or replace the defective light. The five (5) year warranty is non transferable, applies to the original owner, and is subject to the following terms and conditions. The warranty will be void in cases of misuse, severe abuse, and failure to properly install the LED Light. Breakage of the lens or housing, corrosion at the plug, wire wicking, voltage spikes, and product failure caused by road chemicals and acid type washes are not warrantable claims. This warranty gives you specific legal rights and you may also have other legal rights that vary from state to state.